RF POWER AMPLIFIER

R&K-A00110-4040-R

- All-Solid-State Amplifier
- Frequency Range :10MHz～1000MHz
- Output Power :10W(min.) @1dB Comp.

SPECIFICATIONS @＋25℃

Frequency Range	: 10MHz ~ 1000MHz
Small Signal Gain	: ＋40.0dB (min.)
Gain Flatness	: ±1.5dB (max.)
Output Power	: 10W (min.) @1dB Comp.
Output I.C.P	: ＋50.0dBm (typ.)
Noise Figure	: 10dB (typ.)
Harmonics	: －18.0dBc (max.) @Po=10W
Spurious	: －60.0dBc (max.) @Po=10W
Operation Mode	: Class A
Impedance	: 50Ω
Input VSWR	: 2.0 (max.)
Output VSWR	: 2.5 (max.)
AC Supply Input	: AC100V±10%／1φ, 50／60Hz, 250VA
Maximum RF Input Power	: ＋3dBm
Operating Temperature	: －10℃ to ＋45℃
Storage Temperature	: －15℃ to ＋65℃
Connectors	
RF - IN	: SMA - FEMALE
RF - OUT	: SMA - FEMALE
Size	: (W)260mm×(D)350mm×(H)177mm
Weight	: 10.0kg (max.)
Cooling	: Forced Air Cooling

OUTLINE DRAWING

※IN MILLIMETERS

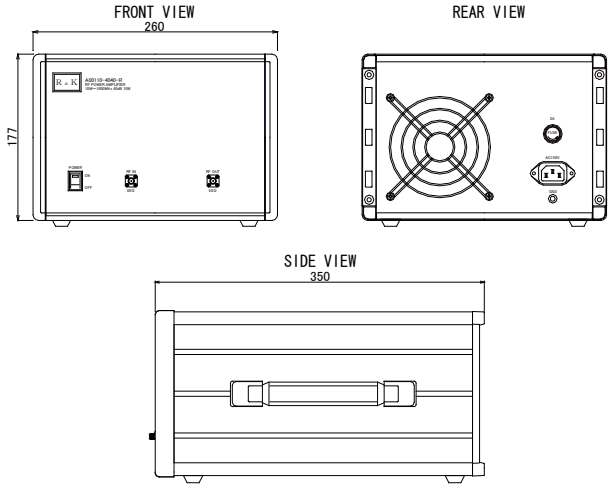

HOW TO ORDER

Model Name

R&K-A00110-4040-R — No Option

TYPICAL PERFORMANCE (Temp @+25℃)

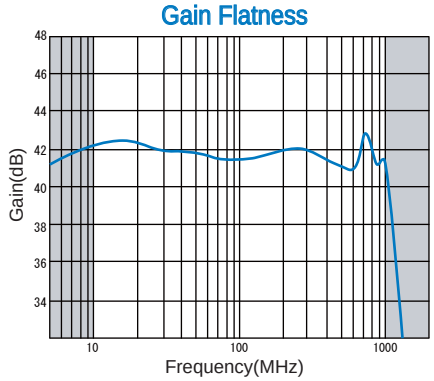

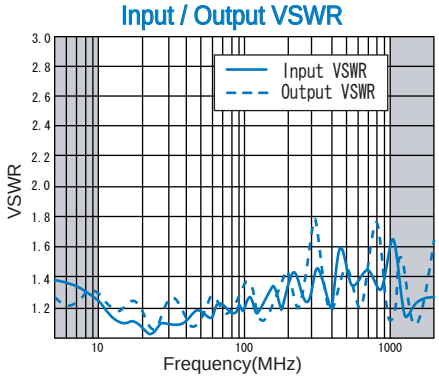

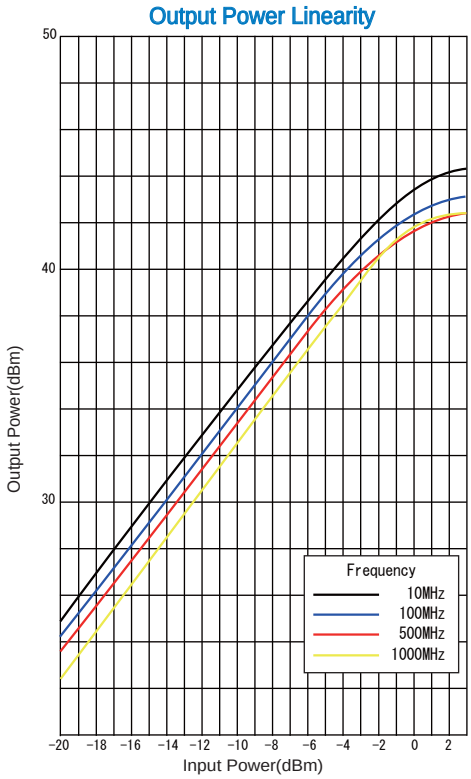

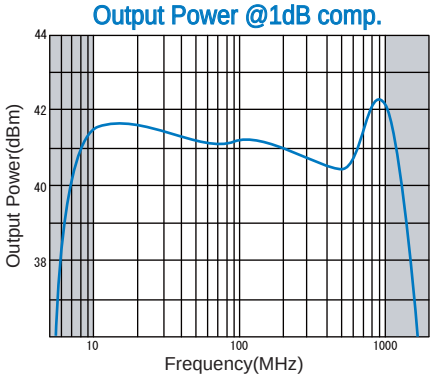

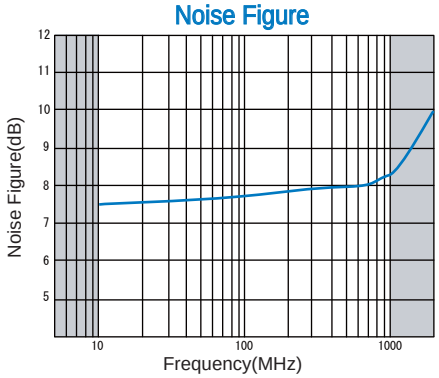

R&K reserves the right to make changes in the specifications of or discontinue products at any time without notice. R&K products shall not be used for or in connection with equipment that requires an extremely high level of reliability and safety such as aerospace uses or medical life support equipment. Further, R&K cannot export products to any country for use in military or defense applications.

R&K Company Limited
721-1 Maeda,Fuji-City,Shizuoka-Pref.416-8577 Japan
Tel : +81-545-31-2600 E-mail : info@rkco.jp
Fax : +81-545-31-1600 URL : http://rk-microwave.com